Find the component form, magnitude, and direction of $\overrightarrow{PQ}$.

1) Given that P = (–15, 9) and Q = (–7, 8)

$\langle -7-(-15),\ 8-9 \rangle$

$\langle 8, -1 \rangle$

mag $= \sqrt{8^2+(-1)^2}$

$= \sqrt{64+1}$

$= \sqrt{65}$

$\theta = \tan^{-1}\left(\frac{-1}{8}\right)$

$= -7.13$

352.87°

Find the component form of the indicated resultant vector by drawing the vectors on the graph below.

2) Let **u** = ⟨–5, –2⟩, **v** = ⟨–4, 7⟩. Find **u** + **v**.

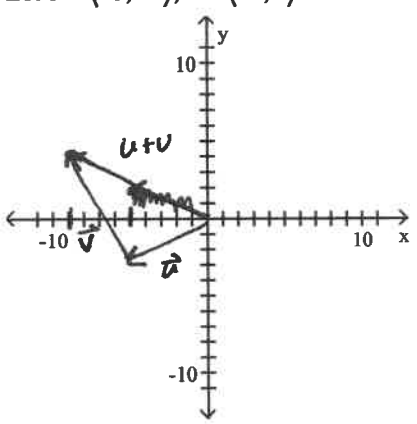

$u+v = \langle -5+(-4),\ -2+7 \rangle$

$\langle -9, 5 \rangle$

Find the component form of the indicated resultant vector by drawing the vectors on the graph

3) Let **u** = ⟨–2, 7⟩, **v** = ⟨8, –7⟩. Find **u** – **v**.

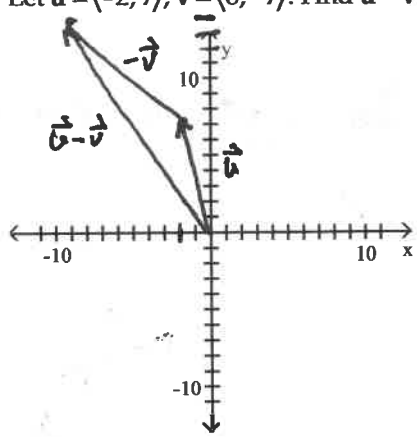

$\langle (-2)-(8),\ 7-(-7) \rangle$

$\langle -10, 14 \rangle$

Find a· b.

4) $\mathbf{a} = \langle 4, -2 \rangle$, $\mathbf{b} = \langle 8, 1 \rangle$

$(4)(8) + (-2)(1)$

$32 + (-2)$

30

Find the angle between the given vectors to the nearest tenth of a degree.

5) $\mathbf{u} = \langle 7, 1 \rangle$, $\mathbf{v} = \langle -6, 5 \rangle$

$\theta = \cos^{-1}\left(\frac{u \cdot v}{|u||v|}\right)$

$\cos^{-1}\left(\frac{(7)(-6) + (1)(5)}{\sqrt{50} \cdot \sqrt{61}}\right) = \cos^{-1}\left(\frac{-37}{\sqrt{3050}}\right) = 132.06^\circ$

Determine whether the vectors u and v are parallel, orthogonal, or neither.

6) $\mathbf{u} = \langle 4, -2 \rangle$, $\mathbf{v} = \langle 6, 12 \rangle$

$(4)(6) + (-2)(12)$

$24 + (-24)$

0

orthogonal

7) $\mathbf{u} = \langle 2, -7 \rangle$, $\mathbf{v} = \langle -10, 35 \rangle$

$2(-10) + (-7)(35)$

$-20 + (-245$

$u = \frac{-7}{2}$ $\quad v = \frac{35}{-10}$

$\frac{-7}{2}$ $\quad \frac{7}{-2}$

parallel

Solve the problem.

8) An airplane flies on a compass heading of 90.0° at 230 mph. The wind affecting the plane is blowing at an angle of 152° at 40 mph. What is the true course and ground speed of the airplane?

$\vec{p} = \langle 230 \cos 90^\circ, 230 \sin 90^\circ \rangle$ $\quad \vec{w} = \langle 40 \cos 152, 40 \sin 152^\circ$

$\vec{p} + \vec{w} = \langle 230 \cos 90 + 40 \cos 152, 230 \sin 90 + 40 \sin 152 \rangle$

$\langle -35.32, 248.78 \rangle$

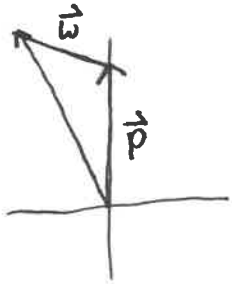

speed $= \sqrt{(-35.32)^2 + (248.78)^2}$

$= 251.27$ mph

2nd Quad

$\tan^{-1}\left(\frac{248.78}{-35.32}\right) = -81.92^\circ$ $(+180)$

$= 98.08^\circ$

9) A force of 110 lb acts on an object at an angle of 45°. A second force of 90 lb acts on the object at an angle of −30°. Find the direction and magnitude of the resultant force.

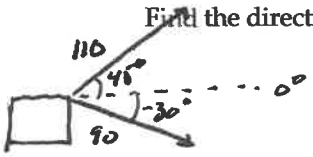

$\vec{F}_1 = \langle 110\cos 45^\circ, 110\sin 45^\circ \rangle$

$\vec{F}_2 = \langle 90\cos -30, 90\sin -30 \rangle$

$\vec{F}_1 + \vec{F}_2 = \langle 110\cos 45 + 90\cos(-30), 110\sin 45 + 90\sin(-30) \rangle$

$\langle 155.72, 32.78 \rangle$

$\tan^{-1}\left(\frac{32.78}{155.72}\right) = 11.89^\circ$

$\text{Mag} = \sqrt{155.72^2 + 32.78^2}$

$= 159.14$

Graph the pair of parametric equations. Then use an algebraic method to eliminate the parameter.

10) $x = 2t - 1$, $y = t^2 + 7$, $-2 \le t \le 3$

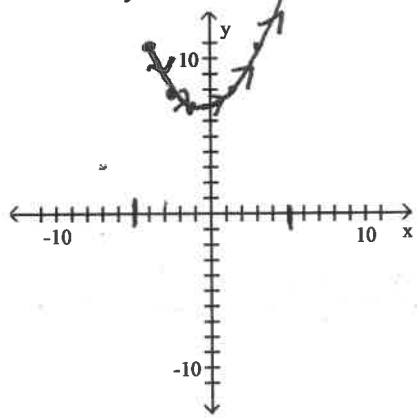

t	x	y
-2	-5	11
-1	-3	8
0	-1	7
1	1	8
2	3	11
3	5	16

$x = 2t - 1$

$x + 1 = 2t$

$\frac{x+1}{2} = t$

$y = t^2 + 7$

$= \left(\frac{x+1}{2}\right)^2 + 7$

$= \frac{(x+1)^2}{4} + 7$

$= \frac{1}{4}(x+1)^2 + 7$

Eliminate the parameter.

11) $x = 6\cos t$, $y = 6\sin t$

$\left(\frac{x}{6}\right)^2 = (\cos t)^2 \quad \left(\frac{y}{6}\right)^2 = (\sin t)^2$

$\frac{x^2}{36} = \cos^2 t \quad \frac{y^2}{36} = \sin^2 t$

$\frac{x^2}{36} + \frac{y^2}{36} = \cos^2 t + \sin^2 t$

$\frac{x^2}{36} + \frac{y^2}{36} = 1$

$x^2 + y^2 = 36$

Find the parametrization for the curve.

12) The line through the points (3, –3) and (7, 3)

$x = x_1 + (x_2 - x_1)t$ $\qquad$ $y = y_1 + (y_2 - y_1)t$

$3 + (7-3)t$ $\qquad$ $-3 + (3-(-3))t$

$x = 3 + 4t$ $\qquad$ $y = -3 + 6t$ $\qquad$ $-\infty < t < \infty$

13) The circle with center (9, –2) and radius 4

$r = 4 \quad h = 9 \quad k = -2$

$x = 4\cos t + 9$

$y = 4\sin t - 2$

14) Suppose a boat leaves port P headed for an island in a direction of 205 degrees with the automatic pilot set for 22 knots. On this particular day, there is 8 knot ocean current with a direction of 116 degrees. At what speed and in what direction will the captain **actually need to travel during** the first hour to account for the wind and land at the desired location.

$\vec{b} = \langle 22\cos 205,\ 22\sin 205 \rangle$ $\qquad$ $\vec{w} = \langle 8\cos 116,\ 8\sin 116 \rangle$

Actual

$\vec{b} - \vec{w} = \langle 22\cos 205 - 8\cos 116,\ 22\sin 205 - 8\sin 116 \rangle$

$= \langle -16.43, -16.49 \rangle$

Speed $= \sqrt{(-16.43)^2 + (-16.49)^2}$

$= 23.28$ knotts $\qquad$ 3rd Quad

Bearing $\tan^{-1}\left(\frac{-16.49}{-16.43}\right) = 45.10\ (+180)$

$= 225.10°$